PRODUCT NAME
EPREX® (Epoetin alfa)

DOSAGE FORMS AND STRENGTHS
Epoetin alfa, a glycoprotein produced by recombinant DNA technology, is the active ingredient.

Not all presentations may be available locally.

Human serum albumin-free (HSA) free, phosphate-buffered, formulations
EPREX® in pre-filled syringes

Concentration of EPREX® International Units	mcg	Volume per syringe (mL)
1,000	8.4	0.5
2,000	16.8	0.5
3,000	25.2	0.3
4,000	33.6	0.4
5,000	42.0	0.5
6,000	50.4	0.6
8,000	67.2	0.8
10,000	84.0	1.0
20,000	168.0	0.5
40,000	336.0	1.0

EPREX® is a sterile, clear, colorless, buffered parenteral solution for intravenous or subcutaneous injection. For chronic renal failure patients including end stage renal disease patients, only intravenous injection should be used.

CLINICAL INFORMATION
Indications
EPREX® is indicated for the treatment of anemia associated with chronic renal failure in pediatric and adult patients on hemodialysis and peritoneal dialysis.

EPREX® is indicated for the treatment of severe anemia of renal origin accompanied by clinical symptoms in adult patients with renal insufficiency not yet undergoing dialysis.

EPREX® is indicated for the treatment of anemia and reduction of transfusion requirements in adult cancer patients receiving chemotherapy.

EPREX® is indicated for the treatment of anemia in adult HIV-infected patients being treated with zidovudine having endogenous erythropoietin levels ≤500 mU/mL.

EPREX® is indicated in adults to facilitate autologous blood collection within a predeposit program and decrease the risk of receiving allogeneic blood transfusions in patients with moderate anemia (hematocrits of 33-39%, hemoglobin of 10-13 g/dL, [6.2-8.1 mmol/L], no iron deficiency), who are scheduled for major elective surgery and are expected to require more blood than that which can be obtained through autologous blood collection techniques in the absence of EPREX®. Treatment should only be given to patients if blood saving procedures are not available or insufficient when the scheduled major elective surgery requires a large volume of blood (4 or more units of blood for females or 5 or more units for males).

EPREX® is indicated to augment erythropoiesis in the perisurgical period in order to reduce allogeneic blood transfusions and correct postoperative anemia in adult non-iron deficient patients undergoing major elective orthopedic surgery. Use should be restricted to patients with moderate anemia (*eg* Hb 10-13 g/dL) who do not have an autologous predonation program available and with expected moderate blood loss (900 to 1800 mL).

EPREX® is indicated for the treatment of anemia (hemoglobin concentration of ≤10 g/dL) in adults with low- or intermediate-1-risk myelodysplastic syndromes (MDS) who have low serum erythropoietin (<200 mU/mL).

Dosage and Administration

General considerations for administration

EPREX® may be administered by intravenous or subcutaneous injection. For chronic renal failure patients including end stage renal disease patients, only intravenous injection should be used.

As for any parenterally administered drug, the injection solution should be inspected for particles and discoloration prior to administration. Do not shake; shaking may denature the glycoprotein, rendering it inactive.

Each EPREX® syringe is for single use only; only one dose of EPREX® should be administered from each syringe.

EPREX® in single use syringes contains no preservatives. Do not re-use syringe. Discard unused portion.

Intravenous Injection

EPREX® should be administered over at least one to five minutes, depending on the total dose.

A slower injection may be preferable in patients who react to the treatment with flu-like symptoms.

In hemodialysis patients, a bolus injection may be given during dialysis via a suitable venous port in the dialysis line. Alternatively, at the completion of a hemodialysis session, the injection can be given via the fistula needle tubing, followed by 10 mL of isotonic saline to rinse the tubing and to ensure satisfactory injection of the product into the circulation.

EPREX® should not be administered by intravenous infusion or mixed with other drugs.

Subcutaneous Injection

The maximum volume per injection site should be 1 mL. In case of larger volumes, more than one injection site should be used.

The injections should be given in the limbs or the anterior abdominal wall.

In situations where the physician determines that a patient or caregiver can safely and effectively administer EPREX® subcutaneously, instruction as to the proper dosage and administration should be provided.

Chronic Renal Failure Patients

In patients with chronic renal failure, only the intravenous route of administration should be used. The hemoglobin concentration aimed for should be between 10 to 12 g/dL (6.2-7.5 mmol/L) in adults and 9.5 to 11 g/dL (5.9-6.8 mmol/L) in children.

In patients with chronic renal failure, maintenance hemoglobin concentration should not exceed the upper limit of the hemoglobin concentration range (see *Warnings and Precautions, Renal Failure Patients*).

When changing the route of administration, the same dose should be used initially and then titrated to keep hemoglobin in the hemoglobin concentration range.

In the correction phase, the dose of EPREX® should be increased if the hemoglobin does not increase at least 1 g/dL (0.62 mmol/L) per month.

A clinically significant increase in hemoglobin is usually not observed in less than 2 weeks and may require up to 6-10 weeks in some patients.

When the hemoglobin concentration is within range, the dose should be decreased by 25 IU/kg/dose in order to avoid exceeding the hemoglobin concentration range. Dose should be reduced when hemoglobin approaches 12 g/dL.

In addition, if the hemoglobin concentration exceeds 12 g/dl (7.5 mmol/L), therapy should be withheld. Dose reductions may be made by omitting one of the weekly doses or by decreasing the amount of each dose.

Adult Hemodialysis Patients

In patients on hemodialysis, only the intravenous route of administration should be used. The treatment is divided into two stages:

Correction phase

50 IU/kg three times per week.

When necessary, dose adjustments should be made in increments of 25 IU/kg three times per week at intervals of at least 4 weeks until the hemoglobin concentration range (10-12 g/dL [6.2-7.5 mmol/L]) is achieved.

Maintenance phase

Adjust dosage in order to maintain hemoglobin values at the desired level: Hb between 10 and 12 g/dL (6.2 – 7.5 mmol/L).

The maintenance dose should be individualized for each chronic renal failure patient. The recommended total weekly dose is between 75 and 300 IU/kg.

Available data suggest that patients with a baseline hemoglobin (<6 g/dL or <3.7 mmol/L) may require higher maintenance doses than patients with a baseline hemoglobin (> 8 g/dL or > 5 mmol/L).

Pediatric Hemodialysis Patients

The treatment is divided into two stages:

Correction phase

50 IU/kg three times per week by the intravenous route.

When necessary, dose adjustments should be made in increments of 25 IU/kg three times per week at intervals of at least 4 weeks until the hemoglobin concentration range (9.5-11 g/dL [5.9-6.8 mmol/L]) is achieved.

Maintenance phase

Appropriate adjustment of the dose should be made in order to maintain the hemoglobin concentration within the desired range between 9.5 g/dL to 11 g/dL (5.9 to 6.8 mmol/L).

Generally, children under 30 kg require higher maintenance doses than children over 30 kg and adults. For example, the following maintenance doses were observed in clinical trials after 6 months of treatment.

	Dose (IU/kg given 3x per week)	
Weight (kg)	Median	Usual maintenance dose
<10	100	75-150
10-30	75	60-150
>30	33	30-100

Available data suggest that patients whose initial hemoglobin is very low (hemoglobin <6.8 g/dL [4.2 mmol/L]) may require higher maintenance doses than patients whose initial hemoglobin is higher (hemoglobin >6.8 g/dL [4.2 mmol/L]).

Adult Peritoneal Dialysis Patients

In peritoneal dialysis patients, only the intravenous route of administration should be used.
The treatment is divided into two stages:

Correction phase

50 IU/kg twice per week.

When necessary, dose adjustments should be made in increments of 25 IU/kg twice per week at intervals of at least 4 weeks until the hemoglobin concentration range (10-12 g/dL [6.2-7.5 mmol/L]) is achieved.

Maintenance phase

The usual dose to maintain the hemoglobin concentration range (10-12 g/dL [6.2-7.5 mmol/L]) is between 25 and 50 IU/kg twice per week in two equal injections.

Adult Predialysis Patients (Adult Patients With End Stage Renal Insufficiency)

In patients with renal insufficiency not yet undergoing dialysis, only the intravenous route of administration should be used.

The treatment is divided into two stages:

Correction phase

50 IU/kg three times per week.

When necessary, dose adjustments should be made in increments of 25 IU/kg three times per week at intervals of at least 4 weeks until the hemoglobin concentration range (10-12 g/dL [6.2-7.5 mmol/L]) is achieved.

Maintenance phase

The usual dose to maintain the hemoglobin concentration range is between 17 and 33 IU/kg three times per week in men and women and it should not be exceeded.

The maximum dosage should not exceed 200 IU/kg 3 times per week.

Cancer Patients

Adult Cancer Patients

The subcutaneous route of administration should be used.

The hemoglobin concentration range should be 10 g/dL (6.2 mmol/L) to 12 g/dL (7.5 mmol/L) in men and women and it should not be exceeded.

EPREX® therapy should continue until one month after the end of chemotherapy. However, the need to continue EPREX® therapy should be re-evaluated periodically.

The initial dose for the treatment of anemia should be 150 IU/kg 3 times per week.

Alternatively, EPREX® can be administered at an initial dose of 40,000 IU subcutaneously once weekly.

If after 4 weeks of treatment at the initial dose, the hemoglobin has increased by at least 1 g/dL (0.6 mmol/L) or the reticulocyte count has increased ≥ 40,000 cells/mcL above baseline the dose should remain unchanged.

If after 4 weeks of treatment at the initial dose, the hemoglobin has not increased by ≥1 g/dL (0.6 mmol/L) and the reticulocyte count has not increased by ≥ 40,000 cells/mcL above baseline, in the absence of red blood cell transfusion, the dose should be increased to 300 IU/kg 3 times per week or 60,000 IU weekly.

If after 4 weeks of additional therapy with 300 IU/kg 3 times per week or 60,000 IU weekly, the hemoglobin has increased ≥1 g/dL (≥ 0.6 mmol/L), or the reticulocyte count has increased ≥ 40,000 cells/mcL, the dose should remain unchanged.

If after 4 weeks of additional therapy with 300 IU/kg three times per week or 60,000 IU per week, the hemoglobin has increased <1 g/dL (0.6 mmol/L) and the reticulocyte count has increased < 40,000 cells/mcL above baseline, response is unlikely and treatment should be discontinued.

The recommended dosing regimen is described in the following diagram:

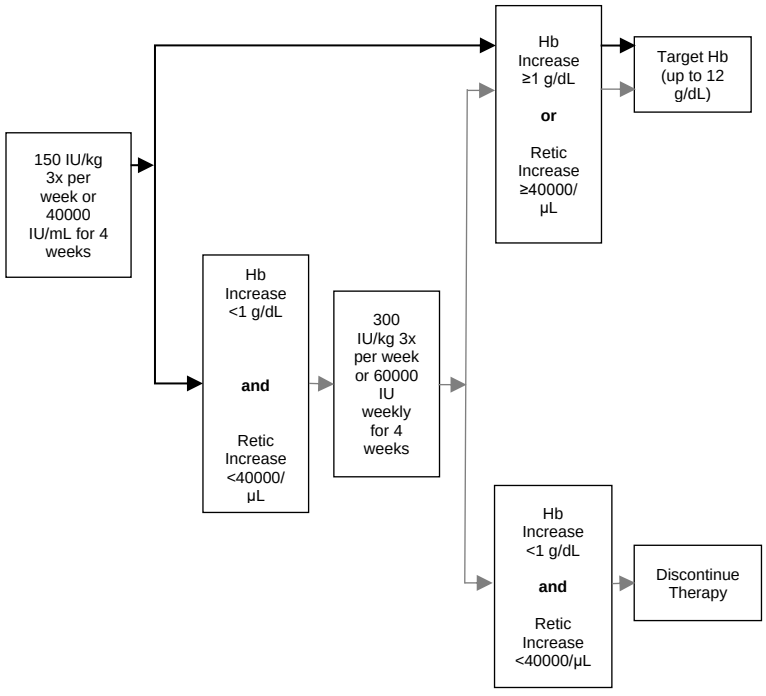

A rate of rise in hemoglobin of greater than 1 g/dL (0.6 mmol/L) per 2 week or 2 g/dL (1.25 mmol/L) per month or hemoglobin levels of >12 g/dL (>7.5 mmol/L) should be avoided. If the hemoglobin is rising by more than 1 g/dL (0.6 mmol/L) per two week or 2 g/dL (1.25 mmol/L) per month or hemoglobin is approaching 12 g/dL (7.5 mmol/L), reduce the EPREX® dose by about 25-50% depending upon the rate of rise of hemoglobin. If the hemoglobin exceeds 12 g/dL (7.5 mmol/L), withhold therapy until it falls below 12 g/dL (7.5 mmol/L) and then reinitiate EPREX® therapy at a dose 25% below the previous dose.

Zidovudine Treated HIV-Infected Patients

Adult Zidovudine Treated HIV-Infected Patients

Prior to beginning EPREX®, it is recommended that the endogenous serum erythropoietin level be determined prior to transfusion. Available data suggest that patients with endogenous serum erythropoietin levels >500 mU/mL are unlikely to respond to therapy with EPREX®.

The treatment is divided into two stages:

Correction phase

100 IU/kg three times per week by the subcutaneous or intravenous route for 8 weeks.

If the response is not satisfactory (*ie*, reduced transfusion requirements or increased hemoglobin) after 8 weeks of therapy, the dose of EPREX® can be increased. Dose increases should be made in increments of 50 to 100 IU/kg three times per week at intervals of at least 4 weeks. If patients have not responded satisfactorily to a EPREX® dose of 300 IU/kg three times per week, it is unlikely that they will respond to higher doses.

Maintenance phase

After the desired response is attained, the dose should be titrated to maintain the hematocrit between 30-35%, based on factors such as variations in zidovudine dose and the presence of intercurrent infections or inflammatory episodes. If the hematocrit exceeds 40%, the dose should be discontinued until the hematocrit decreases to 36%. When treatment is resumed, the dose should be reduced by 25% and then titrated to maintain the desired hematocrit.

In zidovudine-treated HIV-infected patients the hemoglobin concentration should not exceed 12g/dL (7.5mmol/L).

Adult Surgery Patients in an Autologous Pre-Donation Program

The intravenous route of administration should be used. EPREX® should be administered after the completion of each blood donation procedure.

Mildly anemic patients (hematocrit of 33 to 39% and/or hemoglobin 10 to 13 g/dL (6.2-8.1 mmol/L) requiring predeposit of ≥ 4 units of blood should be treated with EPREX® at 600 IU/kg 2 times weekly for 3 weeks prior to surgery.

For those patients who require a lesser degree of erythropoietic stimulation, a dose regimen of 150-300 IU/kg administered twice weekly has been shown to augment autologous pre-donation and to decrease the subsequent decline in hematocrit.

Adult Perisurgery Patients (Without Autologous Blood Donation)

The subcutaneous route of administration should be used.

The recommended dose regimen is 600 IU/kg of EPREX® given weekly for three weeks (days -21, -14 and -7) prior to surgery and on the day of surgery.

In cases where there is a medical need to reduce the time before surgery to less than three weeks, the recommended dose regimen is 300 IU/kg for 10 consecutive days before surgery, on the day of surgery and up to 4 days after surgery. 300 IU/kg/day is recommended for hemoglobin levels ≤ 13 g/dL (8.1 mmol/L). If the hemoglobin level reaches 15 g/dL, or higher, administration of EPREX® should be stopped and further doses should not be given.

Adult Patients with low- or intermediate-1-risk MDS

The subcutaneous route of administration should be used.

EPREX® should be administered to low- or intermediate-1- risk MDS patients with anemia (e.g. hemoglobin concentration ≤ 10 g/dL (6.2 mmol/L)).

The recommended starting dose is EPREX® 450 IU/kg (maximum total dose is 40000 IU) administered subcutaneously once every week.

It is recommended that response be assessed at week 8. If no erythroid response is achieved after 8 weeks according to IWG 2006 criteria (see section 5.1- *Pharmacodynamic properties - Clinical efficacy and safety*), and the hemoglobin concentration is below 11 g/dL (6.8 mmol/L), the dose should be increased from 450 IU/kg once every week to 1050 IU/kg once every week (maximum dose is 80000 IU per week).

Appropriate dose adjustments should be made to maintain hemoglobin concentrations within the target range of 10 g/dL to 12 g/dL (6.2 to 7.5 mmol/L). See diagram below for

guidelines for stepwise dose adjustment. EPREX® should be withheld or the dose reduced when the hemoglobin concentration exceeds 12 g/dL (7.5 mmol/L). Upon dose reduction, if hemoglobin concentration drops ≥1 g/dL the dose should be increased.

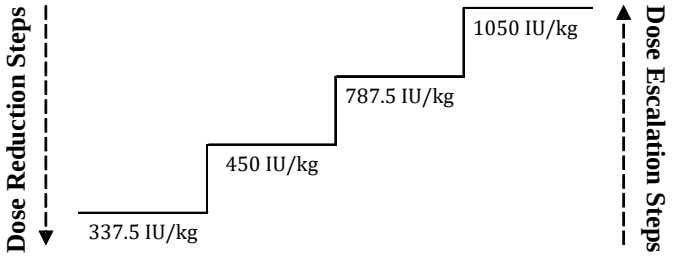

A sustained hemoglobin concentration of greater than 12 g/dL (7.5 mmol/L) should be avoided.

Special populations

Pediatrics (17 years of age and younger)

Treatment of pediatric patients with chemotherapy-induced anemia

The safety and efficacy of EPREX® in pediatric patients receiving chemotherapy have not been established.

Treatment of pediatric Zidovudine treated HIV-infected patients

The safety and efficacy of EPREX® in pediatric Zidovudine treated HIV-infected patients have not been established.

Treatment of pediatric surgery patients in an autologous predonation program

The safety and efficacy of EPREX® in pediatric surgery patients in an autologous predonation program have not been established.

Treatment of pediatric patients scheduled for major elective orthopedic surgery

The safety and efficacy of EPREX® in pediatric patients scheduled for major elective orthopedic surgery have not been established.

Elderly (65 years of age and older)

Dose selection and adjustment for an elderly patient should be individualized to achieve and maintain the hemoglobin concentration range.

Contraindications

Patients who develop antibody-mediated Pure Red Cell Aplasia (PRCA) following treatment with any erythropoietin should not receive EPREX® or any other erythropoietin (see *Warnings and Precautions, Pure Red Cell Aplasia*).

Subcutaneous route of administration in chronic renal failure patients including end stage renal disease patients.

Uncontrolled hypertension.

Hypersensitivity to the active substance or to any of the excipients.

All contraindications associated with autologous blood predonation programs should be respected in patients being supplemented with EPREX®.

The use of EPREX® in patients scheduled for major elective orthopedic surgery and not participating in an autologous blood predonation program is contraindicated in patients with severe coronary, peripheral arterial, carotid or cerebral vascular disease, including patients with recent myocardial infarction or cerebral vascular accident.

Surgery patients who for any reason cannot receive adequate antithrombotic prophylaxis.

Warnings and Precautions

Hypertension

In all patients receiving EPREX®, blood pressure should be closely monitored and controlled as necessary. EPREX® should be used with caution in the presence of untreated, inadequately treated or poorly controllable hypertension. Particular attention should be paid to the development of unusual headaches or an increase in headaches as a possible warning signal.

It may be necessary to initiate or increase anti-hypertensive treatment during EPREX® therapy. If blood pressure cannot be controlled, EPREX® treatment should be discontinued.

Hypertensive crisis with encephalopathy and seizures, requiring the immediate attention of a physician and intensive medical care, have occurred also during EPREX® treatment in patients with previously normal or low blood pressure. Particular attention should be paid to sudden stabbing migraine-like headaches as a possible warning signal (see *Adverse Reactions*).

Pure Red Cell Aplasia

Antibody-mediated PRCA has been reported after epoetin treatment (see *Contraindications*).

PRCA cases have been rarely reported in patients with hepatitis C treated with interferon and ribavirin, when ESAs are used concomitantly. ESAs are not approved in the management of anemia associated with hepatitis C.

In chronic renal failure patients developing sudden lack of efficacy, defined by a decrease in hemoglobin (1 to 2 g/dL per month) with increased need for transfusions, a reticulocyte count should be obtained and typical causes of non-response (e.g., iron folate or Vitamin B_{12} deficiency, aluminum intoxication, infection or inflammation, blood loss, hemolysis and bone marrow fibrosis of any origin) should be investigated. If the reticulocyte count corrected for anemia (i.e., the reticulocyte "index") is low (<20,000/mm^3 or <20,000/mcL or <0.5%) platelet and white blood cell counts are normal, and if no other cause of loss of effect has been found, anti-erythropoietin antibodies should be determined and a bone marrow examination should be considered for diagnosis of PRCA.

If anti-erythropoietin, antibody-mediated PRCA is suspected, therapy with EPREX® should be discontinued immediately. No other ESA therapy should be commenced because of the risk of cross-reaction. Appropriate therapy, such as blood transfusions, may be given to patients when indicated.

General

EPREX® should be used with caution in patients with a epilepsy, history of seizures, or medical conditions associated with a predisposition to seizure activity such as CNS infections and brain metastases.

EPREX® should be used with caution in patients with chronic liver failure. The safety of EPREX® has not been established in patients with hepatic dysfunction. Due to decreased metabolism, patients with hepatic dysfunction may have increased erythropoiesis with EPREX®.

An increased incidence of thrombotic vascular events (TVEs) has been observed in patients receiving ESAs (see *Adverse Reactions*). These include venous and arterial thromboses and embolism (including some with fatal outcomes), such as deep venous thrombosis, pulmonary emboli, retinal thrombosis, and myocardial infarction. Additionally, cerebrovascular

accidents (including cerebral infarction, cerebral hemorrhage and transient ischemic attacks) have been reported.

The reported risk of TVEs should be carefully weighed against the benefits to be derived from treatment with EPREX® particularly in patients with pre-existing risk factors.

In all patients, hemoglobin concentration should be closely monitored due to a potential increased risk of thromboembolic events and fatal outcomes when patients are treated at hemoglobin concentrations above the range for the indication of use.

The safety and efficacy of EPREX® therapy have not been established in patients with underlying hematologic diseases (e.g., hemolytic anemia, sickle cell anemia, thalassemia).

There may be a moderate dose-dependent rise in the platelet count, within the normal range, during treatment with EPREX®. This regresses during the course of continued therapy. In addition, thrombocythemia above the normal range has been reported. It is recommended that the platelet count should be regularly monitored during the first 8 weeks of therapy.

Other causes of anemia (iron, folate or Vitamin B_{12} deficiency, aluminum intoxication, infection or inflammation, traumatic episodes, blood loss, hemolysis and bone marrow fibrosis of any origin) should be evaluated and treated prior to initiating therapy with EPREX®, and when deciding to increase the dose. In most cases, the ferritin values in the serum fall simultaneously with the rise in packed cell volume. In order to ensure optimum response to EPREX®, adequate iron stores should be assured and iron supplementation should be administered if necessary:

- For chronic renal failure patients, iron supplementation (elemental iron 200-300 mg/day orally for adults and 100-200 mg/day orally for pediatrics) is recommended if serum ferritin levels are below 100 ng/mL.
- For cancer patients, iron supplementation (elemental iron 200-300 mg/day orally) is recommended if transferrin saturation is below 20%.
- For patients in an autologous predonation program, iron supplementation (elemental iron 200 mg/day orally) should be administered several weeks prior to initiating the autologous predeposit in order to achieve high iron stores prior to starting EPREX® therapy, and throughout the course of EPREX® therapy.
- For patients scheduled for major elective orthopedic surgery, iron supplementation (elemental iron 200 mg/day orally) should be administered throughout the course of

EPREX® therapy. If possible, iron supplementation should be initiated prior to starting EPREX® therapy to achieve adequate iron stores.

Very rarely, the initial presentation or exacerbation of porphyria has been observed in EPREX®-treated patients. EPREX® should be used with caution in patients with porphyria.

Blistering and skin exfoliation reactions including erythema multiforme and Stevens-Johnson Syndrome (SJS)/toxic epidermal necrolysis (TEN), have been reported in a small number of patients treated with EPREX®. Discontinue EPREX® therapy immediately if a severe cutaneous reaction, such as SJS/TEN, is suspected.

The needle cover on the EPREX® pre-filled syringe contains dry natural rubber (a derivative of latex), which may cause allergic reactions in individuals sensitive to latex.

Erythropoiesis-stimulating agents (ESAs) are not necessarily equivalent. Therefore, it should be emphasized that patients should only be switched from one ESA (such as EPREX®) to another ESA with the authorization of the treating physician.

Geriatric Use

Among 1051 patients enrolled in the 5 clinical studies of EPREX® for reduction of allogeneic blood transfusions in patients undergoing elective surgery 745 received EPREX® and 306 received placebo. Of the 745 patients who received EPREX®, 432 (58%) were aged 65 and over, while 175 (23%) were 75 and over. No overall differences in safety or effectiveness were observed between geriatric and younger patients. The dose requirements for EPREX® in geriatric and younger patients within the 4 studies using the three times per week schedule were similar. Insufficient numbers of patients were enrolled in the study using the weekly dosing regimen to determine whether the dosing requirements differ for this schedule.

Of the 882 patients enrolled in the 3 studies of chronic renal failure patients on dialysis, 757 received EPREX® and 125 received placebo. Of the 757 patients who received EPREX®, 361 (47%) were aged 65 and over, while 100 (13%) were 75 and over. No differences in safety or effectiveness were observed between geriatric and younger patients. Dose selection and adjustment for an elderly patient should be individualized to achieve and maintain the hemoglobin concentration range (see *Dosage and Administration*).

Insufficient numbers of patients age 65 or older were enrolled in clinical studies for the treatment of anemia associated with pre-dialysis chronic renal failure, cancer chemotherapy,

and Zidovudine-treatment of HIV infection to determine whether they respond differently from younger subjects.

Renal Failure Patients

Chronic renal failure patients being treated with EPREX® should have hemoglobin levels measured on a regular basis until a stable level is achieved, and periodically thereafter.

In chronic renal failure patients the rate of increase in hemoglobin should be approximately 1 g/dL (0.62 mmol/L)/per month and should not exceed 2 g/dL (1.2 mmol/L)/per month to minimize risks of an increase in hypertension. Dose should be reduced when hemoglobin approaches 12 g/dL

In patients with chronic renal failure, maintenance hemoglobin concentration should not exceed 12 g/dL, the upper limit of the hemoglobin concentration range as recommended under section on Dosage and Administration. In controlled clinical trials, hemoglobin levels targeted to 13 g/dL or higher were associated with a higher risk of cardiovascular events, including death.

Patients with chronic renal failure and insufficient hemoglobin response to ESA therapy may be at even greater risk for cardiovascular events and mortality than other patients.

Based on information available to date, the use of EPREX® in predialysis end stage renal insufficiency patients does not accelerate the rate of progression of renal insufficiency.

Shunt thromboses have occurred in hemodialysis patients, especially in those who have a tendency to hypotension or whose arteriovenous fistula exhibit complications (e.g., stenoses, aneurisms, etc.) Early shunt revision and thrombosis prophylaxis by administration of acetylsalicylic acid, for example, is recommended in these patients.

Hyperkalemia has been observed in isolated cases, though causality has not been established. Serum electrolytes should be monitored in chronic renal failure patients. If an elevated or rising serum potassium level is detected, then in addition to the appropriate treatment of the hyperkalemia, consideration should be given to ceasing EPREX® administration until the serum potassium level has been corrected.

As a result of an increase in packed cell volume, hemodialysis patients receiving EPREX® frequently require an increase in heparin dose during dialysis. If heparinization is not optimal, occlusion of the dialysis system is possible.

In some female chronic renal failure patients, menses have resumed following EPREX® therapy; the possibility of potential pregnancy should be discussed and the need for contraception evaluated.

Cancer Patients

Cancer patients on EPREX® should have hemoglobin levels measured on a regular basis until a stable level is achieved and periodically thereafter.

ESAs are growth factors that primarily stimulate red blood cell production. Erythropoietin receptors may be expressed on the surface of a variety of tumor cells. As with all growth factors, there is a concern that ESAs could stimulate the growth of tumors.

In controlled clinical studies, use of EPREX® and other ESAs have shown:

- decreased locoregional control, locoregional progression-free survival and overall survival in patients with advanced head and neck cancer receiving radiation therapy when administered to achieve a hemoglobin concentration level of greater than 14 g/dL (8.7 mmol/L),
- shortened overall survival and increased deaths attributed to disease progression at 4 months in patients with metastatic breast cancer receiving chemotherapy when administered to a hemoglobin concentration level of 12 to 14 g/dL (7.5 to 8.7 mmol/L),
- Another ESA (darbepoietin alfa) increased risk of death when administered to achieve a hemoglobin concentration level of 12 g/dL (7.5 mmol/L) in patients with active malignant disease receiving neither chemotherapy nor radiation therapy. ESAs are not indicated for use in this patient population.

In view of the above, the decision to administer recombinant erythropoietin treatment should be based on a benefit-risk assessment with the participation of the individual patient, which should take into account the specific clinical context. Factors to consider in this assessment include: the type of tumor and its stage; the degree of anemia; life-expectancy; the environment in which the patient is being treated; and patient preference (see *Pharmacological Properties, Pharmacodynamic Properties*).

In cancer patients receiving chemotherapy, the 2-3 weeks delay between ESA administration and the appearance of erythropoietin-induced red cells should be considered when assessing whether or not EPREX® therapy is appropriate (in particular for patients at risk of transfusion).

HIV-Infected Patients
If HIV-infected patients fail to respond or maintain a response to EPREX®, other etiologies including iron deficiency anemia should be considered and evaluated.

Adult Surgery Patients in an Autologous Pre-Donation Program
All special warnings and special precautions associated with autologous blood donation programs, especially routine volume replacement, should be respected in patients being supplemented with EPREX®.

Adult Perisurgery Patients (Without Autologous Blood Donation)
Good blood management practices should always be used in the perisurgical setting.

Patients scheduled for major elective orthopedic surgery should receive adequate anti-thrombotic prophylaxis, as thrombotic and vascular events may occur in surgical patients, especially in those with underlying cardiovascular disease. In addition, special precaution should be taken in patients with predisposition for development of DVTs. Moreover, in patients with a baseline hemoglobin of > 13 g/dL (8.1 mmol/L), the possibility that EPREX® treatment may be associated with an increased risk of postoperative thrombotic/vascular events cannot be excluded. Therefore, it should not be used in patients with baseline hemoglobin >13 g/dL (8.1 mmol/L).

The use of EPREX® is not recommended in perisurgery patients with a baseline hemoglobin of > 13 g/dL (8.1 mmol/L).

Interactions
No evidence exists that indicates that treatment with EPREX® alters the metabolism of other drugs. Drugs that decrease erythropoiesis may decrease the response to EPREX®.

Since cyclosporin is bound by red blood cells, there is potential for a drug interaction. If EPREX® is given concomitantly with cyclosporin, blood levels of cyclosporin should be monitored and the dose of cyclosporin adjusted as the hematocrit rises.

No evidence exists that indicates an interaction between EPREX® and G-CSF or GM-CSF with regard to hematological differentiation or proliferation of tumor cells from biopsy specimens *in vitro*.

The effect of EPREX® may be potentiated by the simultaneous therapeutic administration of a hematinic agent, such as ferrous sulphate, when a deficiency state exists.

In patients with metastatic breast cancer, subcutaneous co-administration of 40,000 IU/mL EPREX® with trastuzumab (6 mg/kg) had no effect on the pharmacokinetics of trastuzumab.

Pregnancy, Breast-feeding, and Fertility

Pregnancy

In animal studies, Epoetin alfa has been shown to decrease fetal body weight, delay ossification and increase fetal mortality when given in weekly doses of approximately 20 times the recommended human weekly dose. These changes are interpreted as being secondary to decreased maternal body weight gain.

There are no adequate and well-controlled studies in pregnant women.

EPREX® should be used during pregnancy only if the potential benefit justifies the potential risk to the fetus (see *Non-Clinical Information, Reproductive Toxicology*).

Breast-feeding

Erythropoietin is present in human milk. However, it is not known whether EPREX® is distributed into human milk. EPREX® should be used with caution in nursing women.

In pregnant or lactating surgical patients participating in an autologous blood predonation program, the use of EPREX® is not recommended.

Fertility

The effect of EPREX® on human fertility has not been studied (see *Non-Clinical Information, Reproductive Toxicology*).

Effects on Ability to Drive and Use Machines

In patients with kidney disease, due to the possibility of an increase in blood pressure, there is a small chance of having a seizure when therapy starts. Thus due to the increased risk of hypertension during the initial phase of EPREX® treatment, patients with chronic renal failure should use caution when performing potentially hazardous activities, such as driving or operating machinery, until the optimal maintenance dose of EPREX® has been established. No studies on the effects of EPREX® on the ability to drive and use machines have been performed.

Adverse Reactions

Throughout this section, adverse reactions are presented. Adverse reactions are adverse events that were considered to be reasonably associated with the use of EPREX® based on the comprehensive assessment of the available adverse event information. A causal relationship with EPREX® usually cannot be reliably established in individual cases. Further, because clinical trials are conducted under widely varying conditions, adverse reaction rates observed in the clinical trials of a drug cannot be directly compared to rates in the clinical trials of another drug and may not reflect the rates observed in clinical practice.

Summary of the Safety Profile

A frequent adverse reaction during treatment with EPREX® is a dose-dependent increase in blood pressure or aggravation of existing hypertension. Monitoring of the blood pressure should be performed, particularly at the start of therapy.

The most frequently occurring adverse reactions observed in clinical trials of EPREX® are diarrhea, nausea, vomiting, pyrexia and headache. Influenza-like illness may occur especially at the start of treatment.

An increased incidence of TVEs, has been observed in patients receiving ESAs (see *Warnings and Precautions*).

Hypersensitivity reactions, including cases of rash (including urticaria), anaphylactic reaction, and angio-edema have been reported.

Hypertensive crisis with encephalopathy and seizures, requiring the immediate attention of a physician and intensive medical care, have occurred also during EPREX® treatment in patients with previously normal or low blood pressure. Particular attention should be paid to sudden stabbing migraine-like headaches as a possible warning signal.

Clinical Trial Experience

Of a total 3714 subjects in 29 randomized, double-blinded, placebo or standard of care (SOC) controlled studies, the overall safety profile of EPREX® was evaluated in 2136 anemic subjects. Included were 228 EPREX®-treated CRF subjects in 4 chronic renal failure studies (2 studies in predialysis, N=131 exposed CRF subjects not yet on dialysis and 2 in dialysis, N=97 exposed CRF subjects on dialysis); 1404 exposed cancer. subjects in 16 studies of anemia due to chemotherapy; 144 exposed subjects in 4 HIV-infection studies; 147 exposed subjects in 2 studies for autologous blood donation; and 213 exposed subjects in 1 study in

the perisurgical setting, and 102 exposed subjects in 2 studies in MDS. Adverse reactions reported by ≥1% of subjects treated with EPREX® in these trials are shown in the table below:

Table 1. Summary of Adverse Reactions Reported by ≥1% of Subjects in Clinical Studies With EPREX®

	CRF												MDS	
	Predialysis		Dialysis		Oncology		HIV		ABD		Surgery			
	EPO	Placebo	EPO	Placebo	EPO	Non-ESA	EPO	Placebo	EPO	Non-ESA	EPO	Placebo	EPO	Placebo
System/Organ Class	N=131	N=79	N=97	N=46	N=1404	N=930	N=144	N=153	N=147	N=112	N=213	N=103	N=102	N=53
Adverse Reaction	n (%)	n (%)	n (%)	n (%)	n (%)	n (%)	n (%)	n (%)	n (%)	n (%)	n (%)	n (%)	n (%)	n (%)
Gastrointestinal disorders														
Nausea	14 (11)	10 (13)	23 (24)	13 (28)	265 (19)	193 (21)	36 (25)	39 (25)	26 (18)	11(10)	96 (45)	46 (45)	1 (<1)	NR
Diarrhea	16 (12)	8 (10)	7 (7)	4 (9)	168 (12)	102 (11)	43 (30)	51 (33)	5 (3)	7 (6)	18 (8)	12 (12)	1 (<1)	1 (2)
Vomiting	12 (9)	6 (8)	9 (9)	8 (17)	173 (12)	134 (14)	21 (15)	24 (16)	7 (5)	1 (<1)	36 (17)	14 (14)	NR	NR
General disorders and administration site conditions														
Chills	6 (5)	2 (3)	10 (10)	3 (7)	33 (2)	32 (3)	5 (3)	14 (9)	8 (5)	4 (4)	12 (6)	1 (1)	NR	NR
Influenza like illness	1 (<1)	NR	9 (9)	6 (13)	23 (2)	10 (1)	3 (2)	1 (<1)	4 (3)	1 (<1)	1(<1)	NR	NR	NR
Injection site reaction	14 (11)	16 (20)	1 (1)	NR	42 (3)	31 (3)	14 (10)	13 (9)	NR	1 (<1)	39 (18)	19 (18)	NR	NR
Pyrexia	4 (3)	4 (5)	9 (9)	6 (13)	189 (13)	130 (14)	61 (42)	52 (34)	7 (5)	3 (3)	37 (17)	27 (26)	NR	NR
Peripheral edema	9 (7)	10 (13)	NR	NR	72 (5)	34 (4)	7 (5)	5 (3)	2 (1)	2 (2)	14 (7)	4 (4)	NR	NR
Metabolism and nutrition disorders														
Hyperkalemia	3 (2)	3 (4)	10 (10)	2 (4)	2 (<1)	2 (<1)	NR	NR	NR	NR	NR	1 (1)	NR	NR
Musculoskeletal and connective tissue disorders														
Arthralgia	16 (12)	6 (8)	23 (24)	3 (7)	45 (3)	43 (5)	5 (3)	11 (7)	3 (2)	3 (3)	5 (2)	3 (3)	NR	NR
Bone pain	1 (<1)	NR	6 (6)	1 (2)	47 (3)	26 (3)	3 (2)	NR	NR	1 (<1)	1(<1)	NR	1 (<1)	NR
Myalgia	3 (2)	1 (1)	6 (6)	NR	46 (3)	25 (3)	8 (6)	9 (6)	2 (1)	3 (3)	2 (<1)	NR	NR	NR
Pain in extremity	7 (5)	7 (9)	15 (15)	2 (4)	37 (3)	19 (2)	10 (7)	13 (8)	6 (4)	2 (2)	7 (3)	4 (4)	NR	NR
Nervous system disorders														
Convulsion	1 (<1)	2 (3)	2 (2)	NR	12 (<1)	4 (<1)	2 (1)	2 (1)	NR	NR	NR	NR	NR	NR
Headache	22 (17)	14 (18)	33 (34)	20 (43)	98 (7)	50 (5)	28 (19)	32 (21)	17 (12)	16 (14)	25 (12)	9 (9)	NR	NR

Footnotes appear at the end of the table.
Continued

Table 1. Summary of Adverse Reactions Reported by ≥1% of Subjects in Clinical Studies With EPREX® (Continued)

	CRF													
	Predialysis		Dialysis		Oncology		HIV		ABD		Surgery		MDS	
	EPO	Placebo	EPO	Placebo	EPO	Non-ESA	EPO	Placebo	EPO	Non-ESA	EPO	Placebo	EPO	Placebo
System/Organ Class Adverse Reaction	N=131 n (%)	N=79 n (%)	N=97 n (%)	N=46 n (%)	N=1404 n (%)	N=930 n (%)	N=144 n (%)	N=153 n (%)	N=147 n (%)	N=112 n (%)	N=213 n (%)	N=103 n (%)	N=102 n (%)	N=53 n (%)
Respiratory, thoracic and mediastinal disorders														
Cough	5 (4)	1 (1)	9 (9)	8 (17)	98 (7)	66 (7)	37 (26)	22 (14)	2 (1)	2 (2)	10 (5)	NR	NR	NR
Resp tract congestion	NR	NR	9 (9)	2 (4)	NR	NR	1 (<1)	NR	NR	NR	NR	NR	NR	NR
Skin and subcutaneous tissue disorders														
Rash[a]	8 (6)	6(8)	11(11)	2(4)	93 (7)	47 (5)	36 (25)	19 (12)	3 (2)	2 (2)	8 (4)	2 (2)	NR	NR
Vascular disorders														
Embolism and thrombosis[b]	2 (2)	NR	15 (15)	2 (4)	76 (5)	33 (4)	7 (5)	1 (<1)	6 (4)	3 (3)	18 (8)	6 (6)	1 (<1)	NR
Deep vein thrombosis	NR	NR	NR	NR	24 (2)	6 (<1)	NR	NR	2 (1)	2 (2)	10 (5)	3 (3)	NR	NR
Thrombosis	NR	NR	4(4)	1 (2)	18 (1)	6 (<1)	NR	NR	2 (1)	NR	3(1)	NR	NR	NR
Hypertension[c]	35 (27)	20 (25)	32 (33)	5 (11)	43 (3)	24 (3)	3(2)	4 (3)	NR	2 (2)	23 (11)	9 (9)	2 (2)	1 (2)

ADB=autologous blood donation; NR=not reported;

[a] Rash includes urticaria and angioedema

[b] Includes arterial and venous, fatal and non fatal events, such as deep venous thrombosis, pulmonary emboli, retinal thrombosis, arterial thrombosis (including myocardial infarction), cerebrovascular accidents (i.e. stroke including cerebral infarction and cerebral hemorrhage) transient ischemic attacks, and shunt thrombosis (including dialysis equipment) and thrombosis within arteriovenous shunt aneurisms

[c] Hypertension includes hypertensive crisis and hypertensive encephalopathy

Post-marketing Experience

Adverse drug reactions identified during the postmarketing experience with Epoetinum alfa are included in Table 2. In the table, the frequencies are provided according to the following convention:

Very common	≥1/10
Common	≥1/100 and < 1/10
Uncommon	≥1/1000 and <1/100
Rare	≥1/10000, <1/1,000
Very rare	<1/10000, including isolated reports

Antibody-mediated PRCA has been very rarely reported (<1/10,000 cases per patient-year) after months to years of treatment with EPREX®.

Table 2. Adverse Reactions Identified During Postmarketing Experience with EPREX® by Frequency Category Estimated from Spontaneous Reporting Rates

Blood & Lymphatic System Disorders	
Very rare	Erythropoietin Antibody-Mediated Pure Red Cell Aplasia
Very rare	Thrombocythemia

Overdose

The therapeutic margin of EPREX® is very wide. Overdosage of EPREX® may produce effects that are extensions of the pharmacological effects of the hormone. Phlebotomy may be performed if excessively high hemoglobin levels occur. Additional supportive care should be provided as necessary.

PHARMACOLOGICAL PROPERTIES

Pharmacodynamic Properties

Pharmacotherapeutic group: anti-anemic, ATC code: B03XA01.

Mechanism of action

Erythropoietin (EPO) is a glycoprotein hormone produced primarily by the kidney in response to hypoxia and is the key regulator of red blood cell (RBC) production. EPO is involved in all phases of erythroid development, and has its principal effect at the level of erythroid precursors. After EPO binds to its cell surface receptor, it activates signal transduction pathways that interfere with apoptosis and stimulates erythroid cell proliferation. Recombinant human EPO (Epoetin alfa), expressed in Chinese hamster ovary cells, has a 165 amino acid sequence identical to that of human urinary EPO; the 2 are indistinguishable on the basis of functional assays. The apparent molecular weight of erythropoietin is 32000 to 40000 dalton.

Pharmacodynamic effects

Pharmacodynamic responses to HSA-free Epoetin alfa, change in percent reticulocytes, hemoglobin, and total red blood cell counts as well as the area under the curve (AUCs) of these pharmacodynamic parameters, were similar between two dosing regimens (150 IU/kg SC three times per week to 40000 IU/mL SC once weekly).

ESAs are growth factors that primarily stimulate red cell production. Erythropoietin receptors may be expressed on the surface of a variety of tumor cells.

Healthy volunteers

After single doses (20000 to 160000 IU subcutaneously) of Epoetin alfa, a dose-dependent response was observed for the pharmacodynamic markers investigated including: reticulocytes, red blood cell count, and hemoglobin. A defined concentration-time profile with peak and return to baseline was observed for changes in percent reticulocytes. A less defined profile was observed for red blood cell count and hemoglobin. In general, all pharmacodynamic markers increased in a linear manner with dose reaching a maximum response at the highest dose levels.

Further pharmacodynamic studies explored 40000 IU once weekly versus 150 IU/kg 3 times per week. Despite differences in concentration-time profiles the pharmacodynamic response (as measured by changes in percent reticulocytes, hemoglobin, and total red blood cell count) was similar between these regimens. Additional studies compared the 40000 IU once-weekly regimen of Epoetin alfa with biweekly doses ranging from 80000 to 120000 IU subcutaneously. Overall, based on the results of these pharmacodynamic studies in healthy subjects, the 40000 IU once-weekly dosing regimen seems to be more efficient in producing red blood cells than the biweekly regimens despite an observed similarity in reticulocyte production in the once-weekly and biweekly regimens.

Chronic renal failure

Epoetin alfa has been shown to stimulate erythropoiesis in anemic subjects with CRF, including dialysis and pre-dialysis subjects. The first evidence of a response to Epoetin alfa is an increase in the reticulocyte count within 10 days, followed by increases in the red cell count, hemoglobin and hematocrit, usually within 2 to 6 weeks. The hemoglobin response varies between subjects and may be impacted by iron stores and the presence of concurrent medical problems.

Chemotherapy-induced anemia

Epoetin alfa administered 3 times per week or once weekly has been shown to increase hemoglobin and decrease transfusion requirements after the first month of therapy in anemic cancer subjects receiving chemotherapy.

In a study comparing the 150 IU/kg, 3 times-per-week and 40000 IU, once-weekly dosing regimens in healthy subjects and in anemic cancer subjects the time profiles of changes in percent reticulocytes, hemoglobin, and total red blood cells were similar between the two dosing regimens in both healthy and anemic cancer subjects. The AUCs of the respective pharmacodynamic parameters were similar between the 150 IU/kg, 3 times-per-week and 40000 IU, once-weekly dosing regimens in healthy subjects and also in anemic cancer subjects.

Adult surgery patients in an autologous predonation program

Epoetin alfa has been shown to stimulate red blood cell production in order to augment autologous blood collection, and to limit the decline in hemoglobin in adult patients scheduled for major elective surgery who are not expected to predeposit their complete perioperative blood needs.

Treatment of adult patients scheduled for major elective orthopedic surgery

In patients scheduled for major elective orthopedic surgery with a pretreatment hemoglobin of > 10 to ≤ 13 g/dL, Epoetin alfa has been shown to decrease the risk of receiving allogeneic transfusions and hasten erythroid recovery (increased hemoglobin levels, hematocrit levels, and reticulocyte counts).

Clinical studies

Chronic renal failure

A randomized prospective trial (CHOIR) evaluated 1432 anemic chronic renal failure patients who were not undergoing dialysis. Patients were assigned to Epoetin alfa treatment targeting a maintenance hemoglobin level of 13.5 g/dL (higher than the recommended target hemoglobin level) or 11.3 g/dL. A major cardiovascular event (death, myocardial infarction, stroke or hospitalization for congestive heart failure) occurred among 125 (18%) of the 715 patients in the higher hemoglobin group compared to 97 (14%) among the 717 patients in the lower hemoglobin group (hazard ratio [HR] 1.3, 95% CI: 1.0, 1.7, p = 0.03).

Chemotherapy induced anemia

In a prospective, randomized, double-blind, placebo-controlled trial conducted in 375 anemic patients with various non-myeloid malignancies receiving non-platinum chemotherapy, there was a significant reduction of anemia-related sequelae (e.g., fatigue, decreased energy, and activity reduction), as measured by the following instruments and

scales: Functional Assessment of Cancer Therapy-Anemia (FACT-An) general scale, FACT-An fatigue scale, and Cancer Linear Analogue Scale (CLAS).

A randomized, open-label, multicenter study was conducted in 2098 anemic women with metastatic breast cancer, who received first line or second line chemotherapy. This was a non-inferiority study designed to rule out a 15% risk increase in tumor progression or death of epoetin alfa plus SOC as compared with SOC alone. The median progression free survival (PFS) per investigator assessment of disease progression was 7.4 months in each arm (HR 1.09, 95% CI: 0.99, 1.20), indicating the study objective was not met. Median PFS with disease progression assessed by the Independent Review Committee was 7.6 months in each arm (HR 1.03, 95% CI: 0.92, 1.15). At clinical cutoff, 1337 deaths were reported. Median overall survival in the epoetin alfa plus SOC group was 17.2 months compared with 17.4 months in the SOC alone group (HR 1.06, 95% CI: 0.95, 1.18). Significantly fewer patients received RBC transfusions in the epoetin alfa plus SOC arm (5.8% versus 11.4%); however, significantly more patients had TVEs in the epoetin alfa plus SOC arm (2.8% versus 1.4%). At the final analysis, 1653 deaths were reported. Median overall survival in the epoetin alfa plus SOC group was 17.8 months compared with 18.0 months in the SOC alone group (HR 1.07, 95% CI: 0.97, 1.18). The median time to progression (TTP) based on investigator-determined progressive disease (PD) was 7.5 months in the epoetin alfa plus SOC group and 7.5 months in the SOC group (HR 1.099, 95% CI: 0.998, 1.210). The median TTP based on IRC-determined PD was 8.0 months in the epoetin alfa plus SOC group and 8.3 months in the SOC group (HR 1.033, 95% CI: 0.924, 1.156).

Survival and tumour progression have been examined in five large controlled studies involving a total of 2833 patients, of which four were double-blind placebo-controlled studies and one was an open-label study. The studies either recruited patients who were being treated with chemotherapy (two studies) or used patient populations in which ESAs are not indicated: anemia in patients with cancer not receiving chemotherapy, and head and neck cancer patients receiving radiotherapy. The target hemoglobin concentration in two studies was >13 g/dL; in the remaining three studies it was 12-14 g/dL. In the open-label study there was no difference in overall survival between patients treated with recombinant human erythropoietin and controls. In the four placebo-controlled studies the hazard ratios for overall survival ranged between 1.25 and 2.47 in favour of controls.

These studies have shown a consistent unexplained statistically significant excess mortality in patients who have anemia associated with various common cancers who received recombinant human erythropoietin compared to controls. Overall survival outcome in the trials could not be satisfactorily explained by differences in the incidence of thrombosis and

related complications between those given recombinant human erythropoietin and those in the control group.

A patient-level data analysis has also been performed on more than 13900 cancer patients (chemo-, radio-, chemoradio-, or no therapy) participating in 53 controlled clinical trials involving several epoetins. Meta-analysis of overall survival data produced a hazard ratio point estimate of 1.06 in favour of controls (95% CI: 1.00, 1.12; 53 trials and 13,933 patients) and for the cancer patients receiving chemotherapy, the overall survival hazard ratio was 1.04 (95% CI: 0.97, 1.11; 38 trials and 10,441 patients). Meta-analyses also indicate consistently a significantly increased relative risk of thromboembolic events in cancer patients receiving recombinant human erythropoietin.

Autologous predonation program

The effect of Epoetin alfa in facilitating autologous blood donation in patients with low hematocrits (≤ 39% and no underlying anemia due to iron deficiency) scheduled for major orthopedic surgery was evaluated in a double-blind, placebo-controlled study conducted in 204 subjects, and a single-blind placebo controlled study in 55 subjects.

In the double-blind study, subjects were treated with Epoetin alfa 600 IU/kg or placebo intravenously once daily every 3 to 4 days over 3 weeks (total 6 doses). On average, subjects treated with Epoetin alfa were able to predeposit significantly more units of blood (4.5 units) than placebo-treated subjects (3.0 units).

In a study where the subject, surgeon and anesthesiologist were blinded**,** subjects were treated with Epoetin alfa 300 IU/kg or 600 IU/kg or placebo intravenously once daily every 3 to 4 days over 3 weeks (total 6 doses). Subjects treated with Epoetin alfa were also able to predeposit significantly more units of blood (Epoetin alfa 300 IU/kg = 4.4 units; Epoetin alfa 600 IU/kg = 4.7 units) than placebo-treated subjects (2.9 units).

Epoetin alfa therapy reduced the risk of exposure to allogeneic blood by 50% compared to subjects not receiving Epoetin alfa.

Major elective orthopedic surgery

The effect of Epoetin alfa (300 IU/kg or 100 IU/kg) on the exposure to allogeneic blood transfusion has been evaluated in a placebo-controlled, double-blind clinical trial in non-iron deficient adult subjects scheduled for major elective orthopedic hip or knee surgery. Epoetin alfa was administered subcutaneously for 10 days prior to surgery, on the day of

surgery, and for four days after surgery. Subjects were stratified according to their baseline hemoglobin (≤ 10 g/dL, > 10 to ≤ 13 g/dL and > 13 g/dL).

Epoetin alfa 300 IU/kg significantly reduced the risk of allogeneic transfusion in subjects with a pretreatment hemoglobin of > 10 to ≤ 13 g/dL. Sixteen percent of Epoetin alfa 300 IU/kg, 23% of Epoetin alfa 100 IU/kg and 45% of placebo-treated subjects required transfusion.

An open-label, parallel-group trial in non-iron deficient adult subjects with a pretreatment hemoglobin of ≥ 10 to ≤ 13 g/dL who were scheduled for major orthopedic hip or knee surgery compared Epoetin alfa 300 IU/kg subcutaneously daily for 10 days prior to surgery, on the day of surgery and for four days after surgery to Epoetin alfa 600 IU/kg subcutaneously once weekly for 3 weeks prior to surgery and on the day of surgery.

From pretreatment to presurgery, the mean increase in hemoglobin in the 600 IU/kg weekly group (1.44 g/dL) was twice than that observed in the 300 IU/kg daily group (0.73 g/dL). Mean hemoglobin levels were similar for the two treatment groups throughout the postsurgical period.

The erythropoietic response observed in both treatment groups resulted in similar transfusion rates (16% in the 600 IU/kg weekly group and 20% in the 300 IU/kg daily group).

Adult patients with low- or intermediate-1-risk MDS

A randomized, double-blind, placebo-controlled, multicenter study evaluated the efficacy and safety of epoetin alfa in adult anemic subjects with low- or intermediate-1-risk MDS.

Erythroid response was defined according to IWG 2006 criteria as a hemoglobin increase ≥ 1.5 g/dL from baseline or a reduction of RBC units transfused by an absolute number of at least 4 units every 8 weeks compared to the 8 weeks prior to baseline, and a response duration of at least 8 weeks.

Erythroid response during the first 24 weeks of the study was demonstrated by 27/85 (31.8%) of the subjects in the epoetin alfa group compared to 2/45 (4.4%) of the subjects in the placebo group ($p<0.001$).

Median time from baseline to first transfusion was statistically significantly longer in the epoetin alfa group compared to placebo (49 vs. 37 days; $p=0.046$). After 4 weeks of

treatment the time to first transfusion was further increased in the epoetin alfa group (142 vs. 50 days, p=0.007). The percentage of subjects who were transfused in the epoetin alfa group decreased from 51.8% in the 8 weeks prior to baseline to 24.7% between weeks 16 and 24, compared to the placebo group which had an increase in transfusion rate from 48.9% to 54.1% over the same time periods.

Pediatric Population

Chronic renal failure

Epoetin alfa was evaluated in an open-label, non-randomized, escalating dosing, 52-week clinical study in pediatric CRF subjects undergoing hemodialysis. The median age of subjects enrolled in the study was 11.6 years (range 0.5 to 20.1 years).

Epoetin alfa was administered at 75 IU/kg/week intravenously in 2 or 3 divided doses post-dialysis, titrated by 75 IU/kg/week at intervals of 4 weeks (up to a maximum of 300 IU/kg/week), to achieve a 1 g/dL/month increase in hemoglobin. The desired hemoglobin concentration range was 9.6 to 11.2 g/dL. Eighty-one percent of subjects achieved hemoglobin concentrations in the desired range. The median time to target was 11 weeks and the median dose at target was 150 IU/kg/week. Of the subjects who achieved the target, 90% did so on a 3 times-per-week dosing regimen.

After 52 weeks, 57% of subjects remained in the study, receiving a median dose of 200 IU/kg/week.

Clinical data with subcutaneous administration in children are limited. In 5 small, open label, uncontrolled studies (number of patients ranged from 9-22, total N=72), epoetin alfa was administered subcutaneously in children at starting doses of 100 IU/kg/week to 150 IU/kg/week with the possibility to increase up to 300 IU/kg/week. In these studies, most were predialysis patients (N=44), 27 patients were on peritoneal dialysis and 2 were on hemodialysis with age ranging from 4 months to 17 years. Overall, these studies have methodological limitations but treatment was associated with positive trends towards higher hemoglobin levels. No unexpected adverse events were reported.

Pharmacokinetic Properties

Intravenous Administration

Measurement of Epoetin alfa following multiple dose intravenous (IV) administration of 50 to 100 IU/kg revealed a half-life of approximately 4 hours in healthy subjects and a longer half-life in renal failure patients of approximately 5 hours after doses of 50, 100 and 150 IU/kg. A half-life of approximately 6 hours has been reported in children. With at least

4 days of PK blood sampling, half-life estimates ranging from 20.1 to 33.0 hours were observed in cancer subjects receiving 667 and 1500 IU/kg IV doses of Epoetin alfa.

Subcutaneous Administration

Serum concentrations following subcutaneous injection are lower than those following intravenous injection. Serum levels increase slowly and reach a peak 12 to 18 hours after subcutaneous dosing. The peak serum concentration is below the peak observed using the intravenous route (approximately $1/20^{th}$ of the value).

There is no accumulation: serum levels remain the same, whether data are collected 24 hours after the first injection or 24 hours after the last injection. Concentration-time profiles of erythropoietin on Week 1 and Week 4 were similar during multiple dosing of 600 IU/kg/once weekly in healthy subjects.

The pharmacokinetic data indicate no apparent difference in half-life among adult patients above or below 65 years of age.

A study of 7 preterm very low birth weight neonates and 10 healthy adults given IV erythropoietin suggested that distribution volume was approximately 1.5 to 2 times higher in the preterm neonates than in the healthy adults, and clearance was approximately 3 times higher in the preterm neonates than in the healthy adults.

The half-life for the subcutaneous route of administration is approximately 24 hours. Mean half-life values in healthy subjects were 19.4 ± 8.1 and 15.0 ± 6.1 with multiple dosing of 150 IU/kg three times per week and 40,000 IU/mL once weekly, respectively.

In a study comparing 40,000 IU SC once weekly to 150 IU/kg SC three times per week dosing regimens of HSA-containing Epoetin alfa in healthy subjects, the following parameters were estimated using data corrected for predose endogenous erythropoietin concentration during Week 4:

	C_{max} (mIU/mL)	C_{min} (mIU/mL)	$t_{1/2}$ (h)
150 IU/kg TIW (n=24)	191(100.1)	39 (17.9)	31.8
40000 IU QW (n=22)	785 (427.3)	13 (9.5)	39.3

TIW = three times per week
QW = once weekly
Data from Study EPO-PHI-370

Based on AUC comparison, relative bioavailability of Epoetin alfa 40,000 IU once weekly versus 150 IU/kg three times per week was 176%.
In a study comparing 40,000 IU SC once weekly versus 150 IU/kg SC three times per week dosing of HSA-free Epoetin alfa in healthy subjects, the following parameters were estimated using data corrected for predose endogenous erythropoietin concentration during Week 4:

	C_{max} (mIU/mL)	C_{min} (mIU/mL)	$t_{1/2}$ (h)
150 IU/kg TIW (n=17)	143 (54.2)	18 (9.3)	19.4
40000 IU QW (n=17)	861 (445.1)	3.8 (4.27)	15.0

TIW = three times per week
QW = once weekly
Data from Study EPO-PHI 373

Based on AUC comparison, relative bioavailability of Epoetin alfa 40000 IU/mL once weekly versus 150 IU/kg three times per week was 239%.

The bioavailability of subcutaneous Epoetin alfa after a dose of 120 IU/kg is much lower than that of the intravenous drug: approximately 20%.

Anemic cancer patients receiving chemotherapy after subcutaneous administration of epoetin alfa 40,000 IU once per week, had a higher C_{max}, higher exposure of erythropoietin in serum (in terms of AUC $_{0\text{-}168h}$) and a lower CL/F, than patients receiving epoetin alfa 150 IU/kg three times per week. However, similar responses, in terms of Hb levels and related haematocrit, red blood cell counts, absolute reticulocyte counts, and initial % reticulocytes, were observed with both dosing regimens.

Pharmacokinetic parameters were estimated in healthy subjects and anemic cancer subjects receiving cyclic chemotherapy and either 150 IU/kg three times per week or 40,000 IU/mL once weekly of HSA-containing Epoetin alfa. The pharmacokinetic parameters of anemic cancer subjects were different from those observed in healthy subjects during Week 1 (when the anemic cancer subjects were receiving chemotherapy) but were similar during Week 3 (when the anemic cancer subjects were not receiving chemotherapy).

	C_{max} (mIU/mL)	C_{min}[b] (mIU/mL)	t_{max} (h)	$t_{1/2}$ (h)	CL/F (mL/h/kg)
Healthy Subjects					
150 IU/kg TIW (n=6)[a]	163 (53.6)	28.6 (10.4)	9.00 (3.29)	25.0 (7.13) [n=4]	31.2 (11.5)
40000 IU QW (n=6)	1036 (238)	9.25 (5.74)	21.0 (7.10)	28.8 (8.10)	12.6 (3.05)
Anemic Cancer Subjects: Week 1 when subjects were receiving chemotherapy					
150 IU/kg TIW (n=14)[a]	414 (312)	90.4 (41.4)	13.3 (12.4)	43.7 (3.94) [n=3]	20.2 (15.9)
40000 IU QW (n=18)[a]	1077 (510)	116 (230)	38.5 (17.8)	35.3 (16.8) [n=11]	9.16 (4.69)
Anemic Cancer Subjects: Week 3 when subjects were not receiving chemotherapy					
150 IU/kg TIW (n=4)[a]	178 (57.5)	---	14.2 (6.67)	41.9 (14.8) [n=2]	23.6 (9.51)
40000 IU QW (n=7)	897 (322)	---	22.3 (4.54)	38.8 (11.0)	13.9 (7.55)

TIW = three times per week
QW = once weekly
Data from Study PHI 377

[a] "n" as indicated unless specifically stated
[b] C_{min} was estimated by averaging weekly predose serum concentrations during the study

Pharmacokinetics of HSA-free Epoetin alfa were studied in anemic cancer subjects receiving cyclic chemotherapy after the 150 IU/kg three times per week and 40000 IU/mL once weekly dosing regimens. In general, there was a high degree of variability associated with the pharmacokinetic parameters in anemic cancer subjects. In general, the first pharmacokinetic profile of Epoetin alfa during Week 1 (when the anemic cancer subjects were receiving chemotherapy) demonstrated higher C_{max}, increased half-life, and lower clearance than the second pharmacokinetic profile during Week 3 or 4 (when the anemic cancer subjects were not receiving chemotherapy).

	C_{max} (mIU/mL)	C_{min} [b] (mIU/mL)	t_{max} (h)	$t_{1/2}$ (h)	CL/F (mL/h/kg)
Week 1 when subjects were receiving chemotherapy					
150 IU/kg TIW (n=16) [a]	642 (402.7)	207 (301.4)	14.98 (8.8)	28.3 (19.2) [n=7]	12.1 (11.2)
40000 IU QW (n=19) [a]	1289 (431.0)	148 (144.2)	48.74 (28.3)	76.2 (45.8) [n=9]	5.6 (1.8)
Week 3 or 4 when subjects were not receiving chemotherapy					
150 IU/kg TIW (n=9) [a]	357 (246.2)	---	20.67 (20.1)	30.0 (10.0) [n=6]	17.2 (7.8)
40000 IU QW (n=11)	941 (372.7)	---	24.54 (10.8)	46.7 (22.3)	12.7 (7.5)

TIW = three times per week
QW = once weekly
Data from Study EPO-P01-108

[a] "n" as indicated unless specifically stated
[b] C_{min} was estimated by averaging weekly predose serum concentrations during the study

NON CLINICAL INFORMATION

Chronic Toxicity

In repeated dose toxicological studies in dogs and rats, but not in monkeys, Epoetin alfa therapy was associated with subclinical bone marrow fibrosis. Bone marrow fibrosis is a known complication of chronic renal failure in humans; it may be related to secondary hyperparathyroidism or unknown factors. In one study, there was no difference in the incidence of bone marrow fibrosis in hemodialysis patients treated with Epoetin alfa for 3 years and hemodialysis patients not treated with Epoetin alfa.

Carcinogenicity

Long-term carcinogenicity studies have not been carried out. There are conflicting reports in the literature regarding ESA as tumor proliferators. The clinical significance of these reports, based on *in vitro* findings from human tumor samples, is unknown.

Mutagenicity

Epoetin alfa does not induce bacterial gene mutation (Ames Test), chromosomal aberrations in mammalian cells, micronuclei in mice, or gene mutation at the HGPRT locus.

Reproductive Toxicology

Preclinical studies have shown no evidence of teratogenicity in rats or rabbits at dosages up to 500 IU/kg/day administered intravenously. However, intravenous administration of Epoetin alfa causes a slight but not statistically significant decrease in fertility at 500 IU/kg, increased pre- and post-implantation loss and decreased fetal body weight at 100 and 500 IU/kg/day and delayed ossification at 20, 100, and 500 IU/kg/day. The latter finding was associated with reduced maternal body weight. Intravenous administration to lactating rats

resulted in decreases in body weight gain, delays in appearance of abdominal hair and eyelid opening, and decreases in the number of caudal vertebra in the F_1 fetuses of the 500 IU/kg/day group. There were no Epoetin alfa-related effects on the F_2 generation fetuses.

PHARMACEUTICAL PARTICULARS

List of Excipients

HSA-free, Phosphate-buffered, Pre-filled Syringes

- Disodium phosphate dihydrate
- Glycine
- Polysorbate 80
- Sodium chloride
- Sodium dihydrogen phosphate dihydrate
- Water for injections

Incompatibilities

Do not dilute or transfer to any other container. Do not administer by intravenous infusion or in conjunction with other drug solutions.

Shelf Life

Refer to outer carton

Storage Conditions

EPREX® syringes are to be stored between 2°C and 8°C [36°F to 46°F] in the refrigerator, away from the freezer compartment. Do not freeze or shake. Keep the syringes in the original carton to protect from light.

EPREX® syringes that are being used or about to be used can be kept at room temperature (not above 25ºC) for a maximum single period of 7 days.

Keep medicine out of the sight and reach of children.

Nature and Contents of Container

EPREX® is supplied in type I glass pre-filled syringes with FluroTec®-coated rubber stoppers and needle with a needle shield (rubber with polypropylene cover).

The needle cover contains dry natural rubber (a derivative of latex) (see *Warnings and Precautions*).

The pre-filled syringes are fitted with the PROTECS™ needle guard device to help prevent needle stick injuries after use.

Concentration of EPREX® International Units	Number of Syringes per Pack
2,000	6
4,000	6
6,000	6
10,000	6
40,000	1

Instructions for Use and Handling and Disposal

[The product is for single use only.]

The product should not be used, and should be discarded if:

- the seal is broken,
- the liquid is colored or
- particles are in it,
- it may have been frozen, or
- there has been a refrigeration failure.

Any waste material should be disposed of in accordance with local requirements

Injecting EPREX®

If EPREX® is injected subcutaneously; the amount injected is not normally more than one milliliter (1 mL) in a single injection.

EPREX® is given alone and not mixed with other liquids for injection.

Do not shake EPREX® syringes. Prolonged vigorous shaking may damage the product. If the product has been shaken vigorously, don't use it.

How to inject subcutaneously using a prefilled syringe

The pre-filled syringes are fitted with the PROTECS™ needle guard device to help prevent needle stick injuries after use. This is indicated on the packaging.

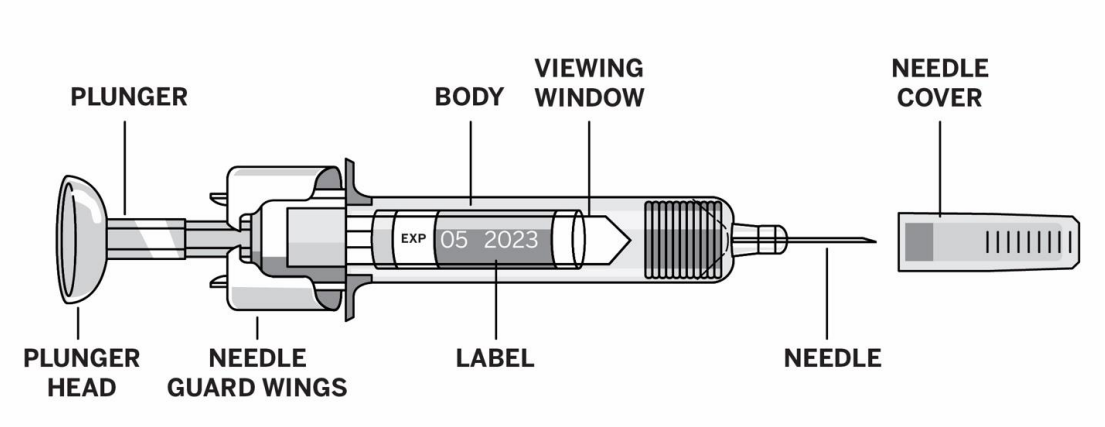

Figure 1

- **Take a syringe out of the refrigerator.** The liquid needs to come to room temperature. This usually takes between 15 to 30 minutes. Do not remove the syringe's needle cover while allowing it to reach room temperature.
- **Check the syringe,** to make sure it is the right dose, has not passed its expiry date, is not damaged, and the liquid is clear and not frozen.
- **Choose an injection site.** Good sites are the top of the thigh and around the abdomen but away from the navel. Vary the site from day to day.
- **Wash your hands. Use an antiseptic swab on the injection site,** to disinfect it.
- **Hold the pre-filled syringe by the body of the syringe with the covered needle pointing upward.**
- **Do not hold by the plunger head, plunger, needle guard wings, or needle cover.**
- **Do not pull back on the plunger at any time.**
- **Do not remove the needle cover from the pre-filled syringe until you are ready to inject your EPREX®.**
- **Take the needle cover off the syringe** by holding the body and pulling the needle cover off carefully without twisting it. Don't push the plunger, touch the needle or shake the syringe.
- **Do not touch the needle guard wings to prevent prematurely covering the needle with the needle guard.**
- **Pinch a fold of skin** between your thumb and index finger. Don't squeeze it.
- **Push the needle in fully.**
- **Push the plunger with your thumb as far as it will go to inject all of the liquid.** Push it slowly and evenly, keeping the skinfold pinched. The needle guard will not activate unless the entire dose is given. **You may hear a click when the needle guard has been activated.**

- When the plunger is pushed as far as it will go, take out the needle and let go of the skin.
- Slowly take your thumb off the plunger. Allow the syringe to move up until the entire needle is covered by the needle guard.
- **When the needle is pulled out of your skin, there may be a little bleeding at the injection site. This is normal. You can press an antiseptic swab** over the injection site for a few seconds after the injection.
- **Dispose of your used syringe** in a safe container.

Only take one dose of EPREX® from each syringe. If any liquid remains in the syringe after an injection, the syringe should be properly disposed of, not reused.

What to do if you miss a dose EPREX®?

Give the next injection as soon as you remember. If you are within a day of the next injection, forget the missed one and carry on with the normal schedule. Do not double up the injections.

PRODUCT REGISTRANT

Johnson & Johnson International (Singapore) Pte. Ltd.
2 Science Park Drive
#07-13, Ascent
Singapore Science Park 1
Singapore 118222

BATCH RELEASER

Cilag AG
Hochstrasse 201,
8200 Schaffhausen,
Switzerland

LAST DATE OF REVISION OF TEXT

01 November 2022 (CCDS 10 September 2021)